EBARA

CONTENTS

50Hz

Rev. G

	Page
- SPECIFICATIONS	**200**
SELECTION CHART	201
TYPE KEY AND CURVE SPECIFICATIONS	202
PERFORMANCE CURVE PRA 0.50	203
PERFORMANCE CURVE PRA 0.80	204
PERFORMANCE CURVE PRA 1.00	205
PERFORMANCE CURVE PRA 1.50	206
PERFORMANCE CURVE PRA 2.00	207
- CONSTRUCTIONS	**300**
SECTIONAL VIEW	300
MECHANICAL SEAL (UP TO 0.75 kW)	301
MECHANICAL SEAL (1.1 kW AND ABOVE)	302
BEARINGS	302
- DIMENSIONS AND WEIGHT	**400**
PUMP	400
PACKING	401
- TECNICAL DATA	**500**
MOTOR DATA	500
NOISE DATA	500

SPECIFICATION

50Hz

Rev. G

PUMP		
Liquid Handled	Type of liquid	Clean water
	Temperature [°C]	min. +5 max. +80
Maximum working pressure [MPa]		0.6 (PRA 0.50) 0.75 (PRA 0.80) 1.2 (PRA 1.00-1.50-2.00)
Construction	Impeller	Peripheral turbine type
	Shaft seal type	Mechanical seal
	Bearing	Sealed ball bearing
Pipe Connection	Suction [inch]	G 1 UNI ISO 228
	Discharge [inch]	G 1 UNI ISO 228
Material	Casing	Cast iron
	Impeller	Brass
	Shaft seal	Ceramic/Carbon/NBR
	Shaft	Carbon steel - AISI 303 (wet extension)
	Bracket	Cast iron
Applicable standard of test		ISO 9906 – Annex A

MOTOR			
Type		Electric - TEFC	
		Single Phase	Three Phase
Efficiency level (Reg. 640/2009)		-	- from 0.37 kW up to 0.6 kW IE2 from 0.75 kW up to 1.5 kW
No. of Poles		2	
Rotation speed	[min^{-1}]	≈ 2850	
Insulation Class		Class F	
Protection degree (CEI EN 60034-5)		IP 44	
Power rating	[kW]	0.37 ÷ 1.5	
	[HP]	0.5 ÷ 2	
Frequency	[Hz]	50	
Voltage	[V]	230 ±10%	230/400 ±10%
Capacitor		Built in	-
Over load protection		Built in	Provided by the user
Casing material		Aluminium	
Base material		Aluminium	
Dimensions of cable entry		PG 11 - PG 13.5 (see dimensions page 400)	

SELECTION CHART

50Hz

Rev. G

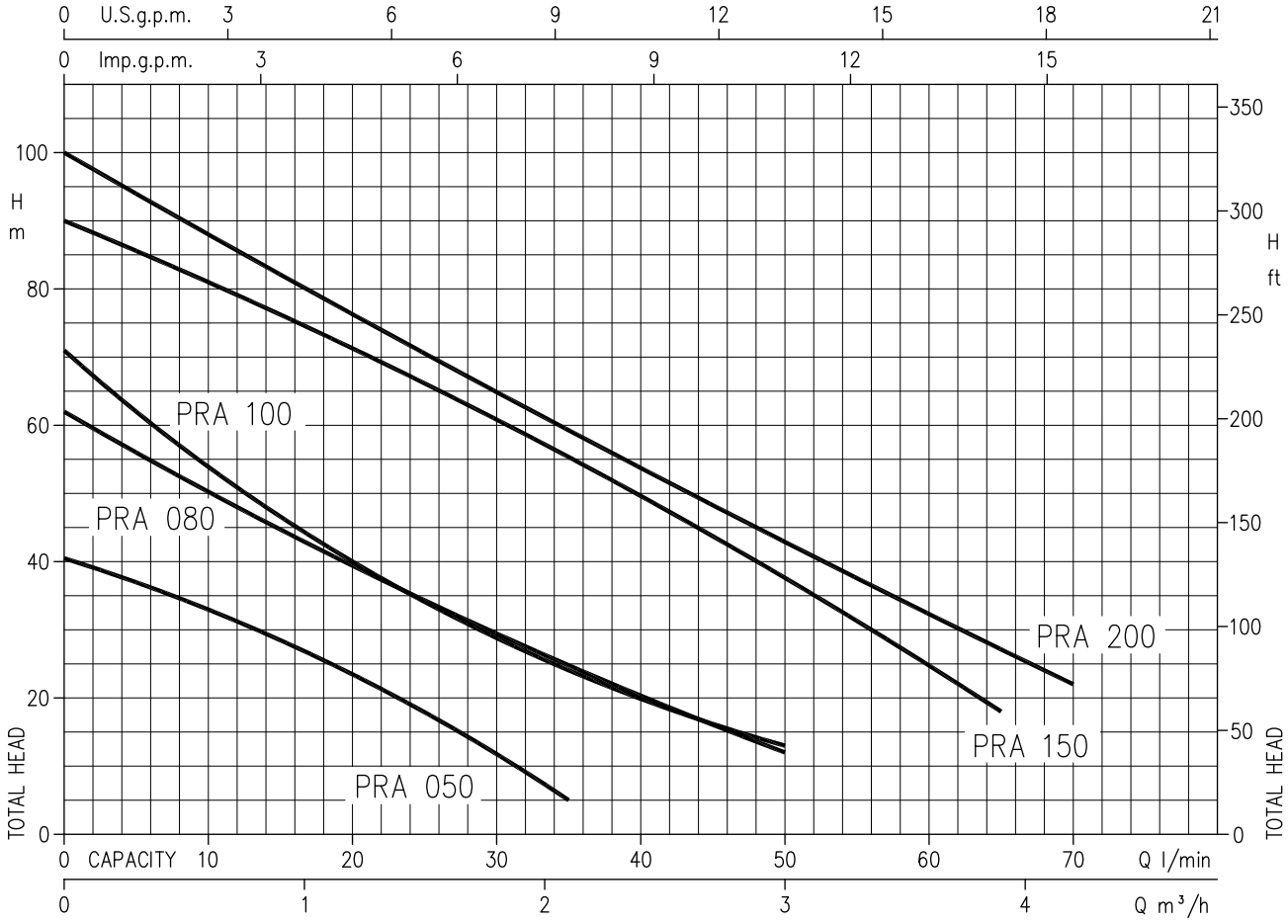

Pump Type		Power		Q=Capacity								
				l/min	0	5	10	15	20	35	50	65	70
Single phase	Three phase	[kW]	[HP]	m³/h	0	0.3	0.6	0.9	1.2	2.1	3	3.9	4.2
				H=Total manometric head in meters									
PRA 0.50 M	PRA 0.50 T	0.37	0.5		40.5	37	33.3	28.7	23.7	5	-	-	-
PRA 0.80 M	PRA 0.80 T	0.6	0.8		62	56	50.7	45.1	39.8	25	12	-	-
PRA 1.00 M	PRA 1.00 T	0.75	1		71	62	54.4	47	40.4	24.3	13	-	-
PRA 1.50 M	PRA 1.50 T	1.1	1.5		90	-	81	76.9	71.9	55.8	37.9	18	-
PRA 2.00 M	PRA 2.00 T	1.5	2		100	-	88	82.9	77	59.8	43.3	27.4	22

TYPE KEY AND CURVE SPECIFICATIONS

50Hz

Rev. G

TYPE KEY

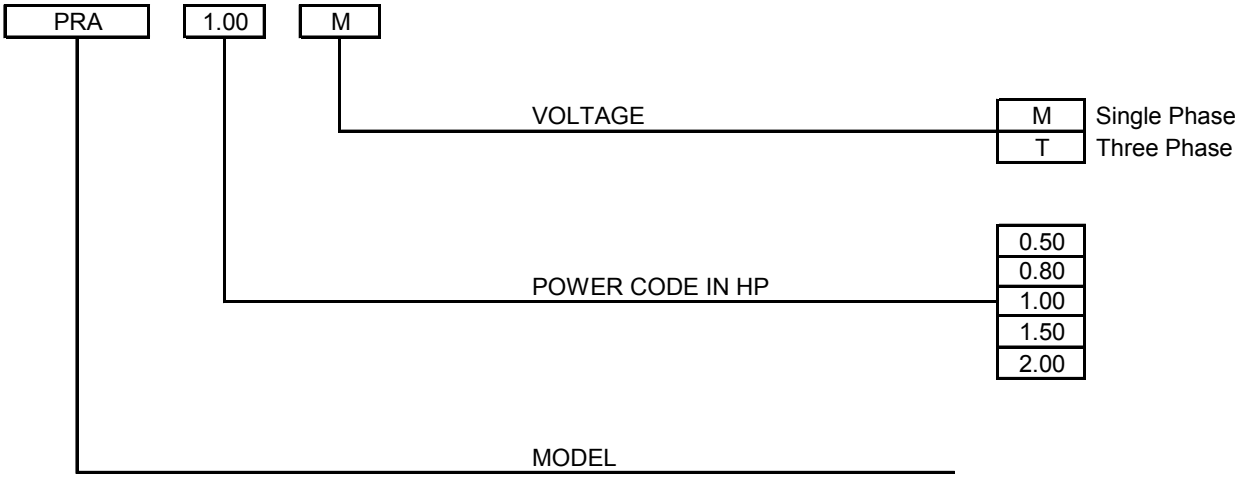

PERFORMANCE CURVE SPECIFICATIONS

The specifications below qualify the curves shown on the following pages.

Tolerances according to ISO 9906 Annex A
The curves refer to effective speed of asynchronous motors at 50 Hz
Measurements were carried out with clean water at 20°C of temperature and with a kinematic viscosity of ν = 1 mm^2/s (1 cSt)
In order to avoid the risk of over-heating, the pumps should not be used at a flow rate below 10% of best efficiency point.

Symbols explanation:

Q = volume flow rate
H = total head

PERFORMANCE CURVE

50Hz

Rev. G

PRA 0.50 (0.37 kW) - Impeller diameter = 60 mm

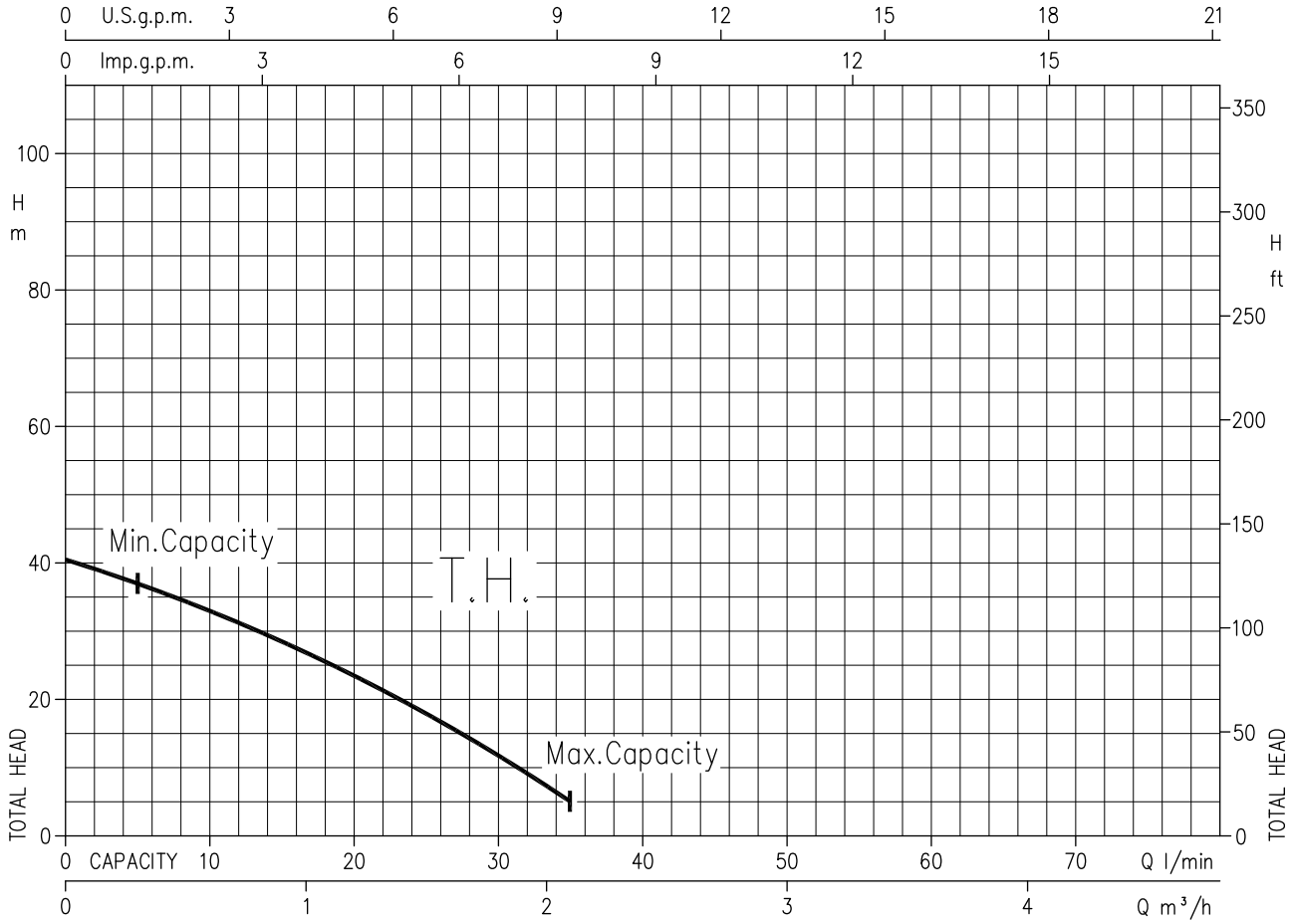

Rotation speed ≈ 2850 min^{-1}
Test standard: ISO 9906 – Annex A

PERFORMANCE CURVE

50Hz

Rev. G

PRA 0.80 (0.6 kW)- Impeller diameter = 70 mm

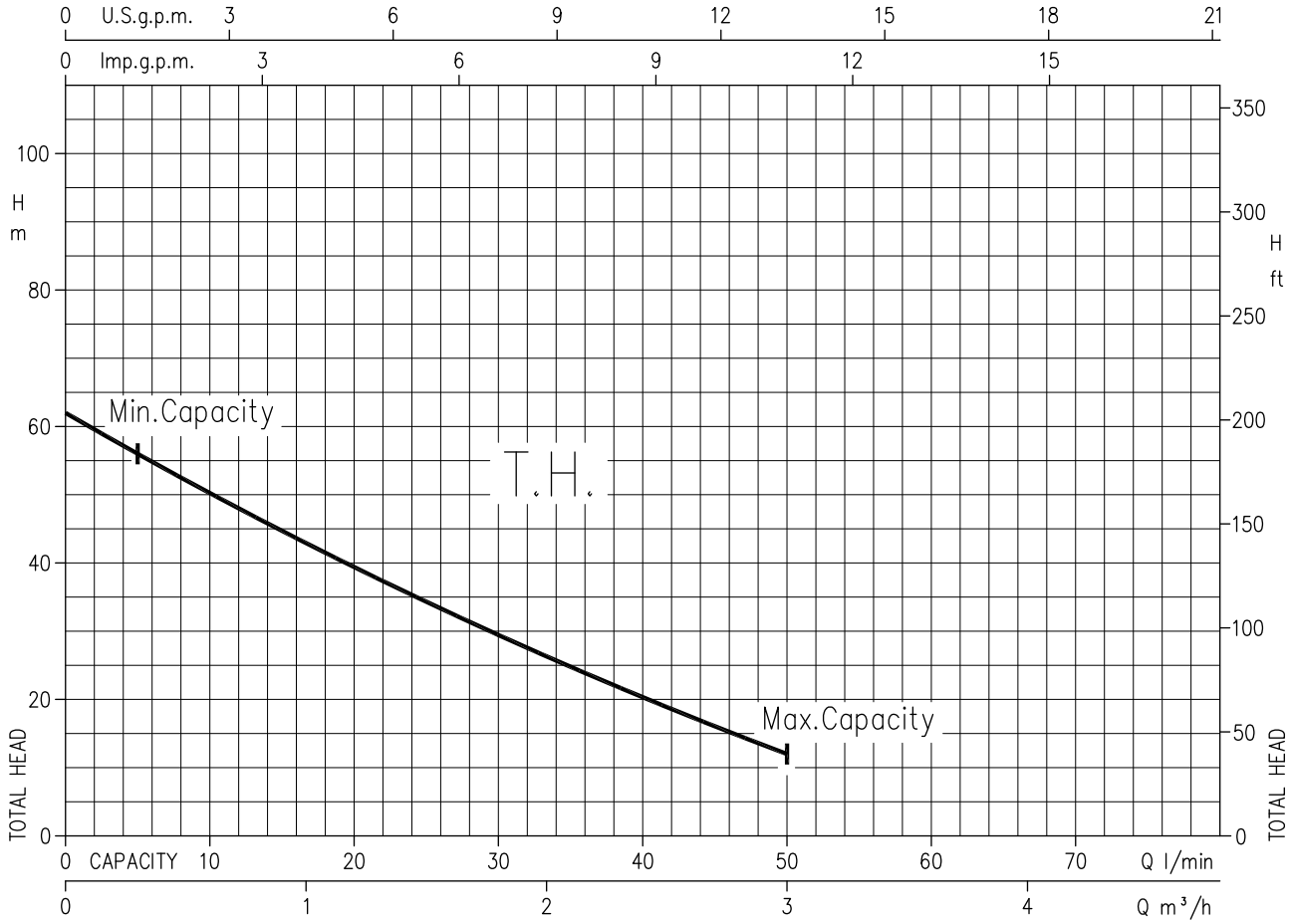

Rotation speed ≈ 2850 min^{-1}
Test standard: ISO 9906 – Annex A

PERFORMANCE CURVE

50Hz

Rev. G

PRA 1.00 (0.75 kW)- Impeller diameter = 70.8 mm

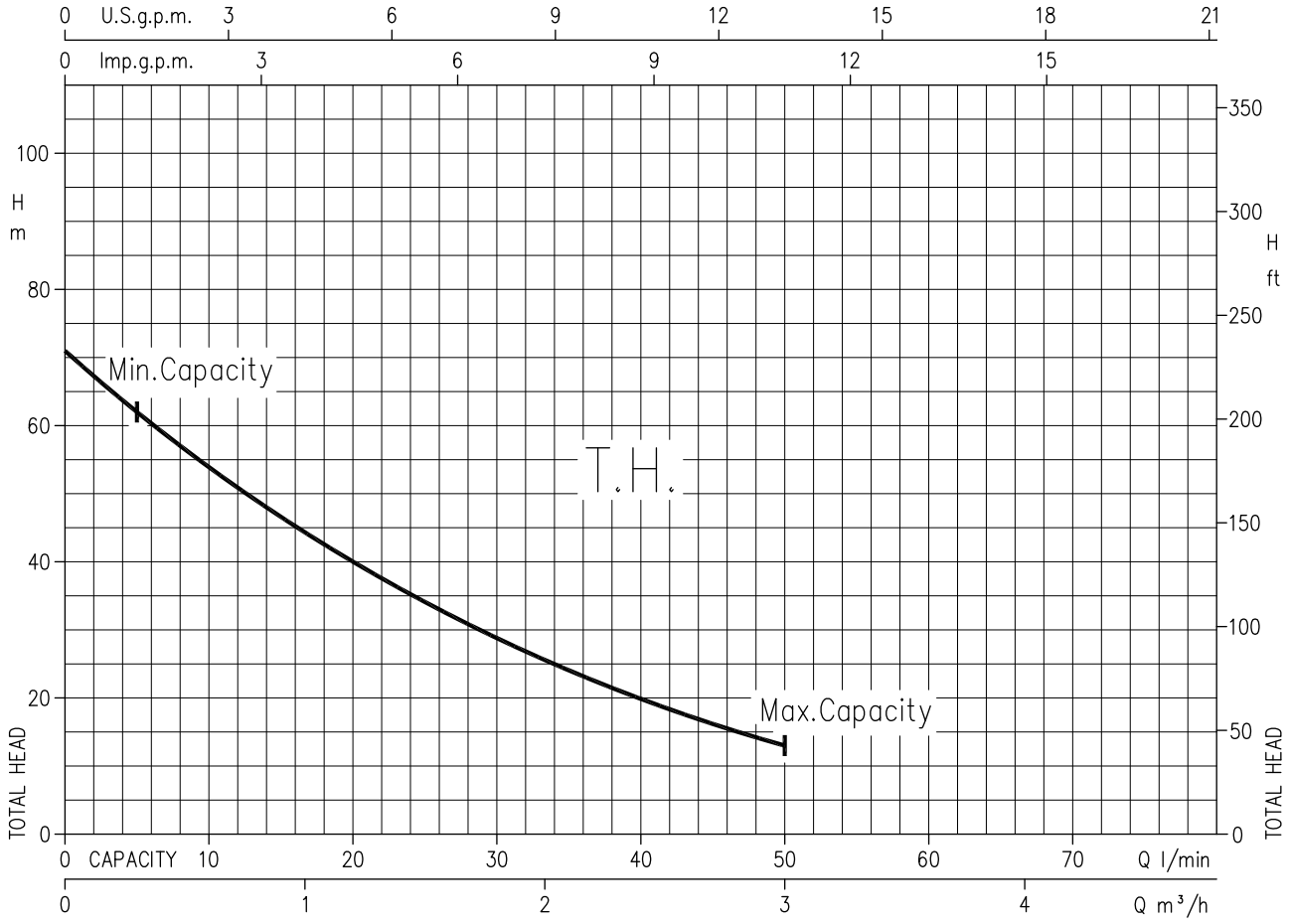

Rotation speed ≈ 2850 min^{-1}
Test standard: ISO 9906 – Annex A

PERFORMANCE CURVE

50Hz

Rev. G

PRA 1.50 (1.1 kW)- Impeller diameter = 77 mm

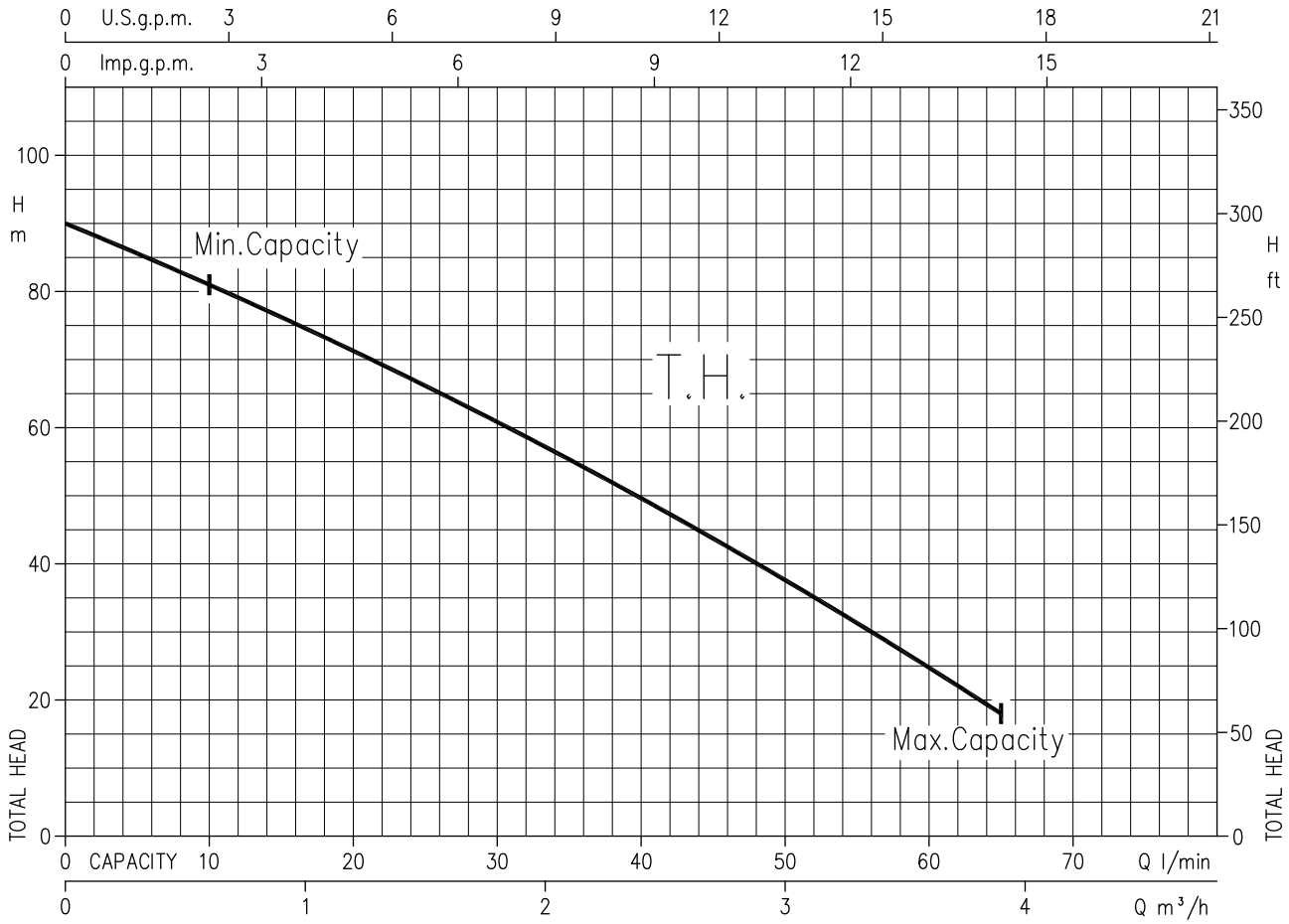

Rotation speed ≈ 2850 min^{-1}
Test standard: ISO 9906 – Annex A

PERFORMANCE CURVE

50Hz

Rev. G

PRA 2.00 (1.5 kW)- Impeller diameter = 78.2 mm

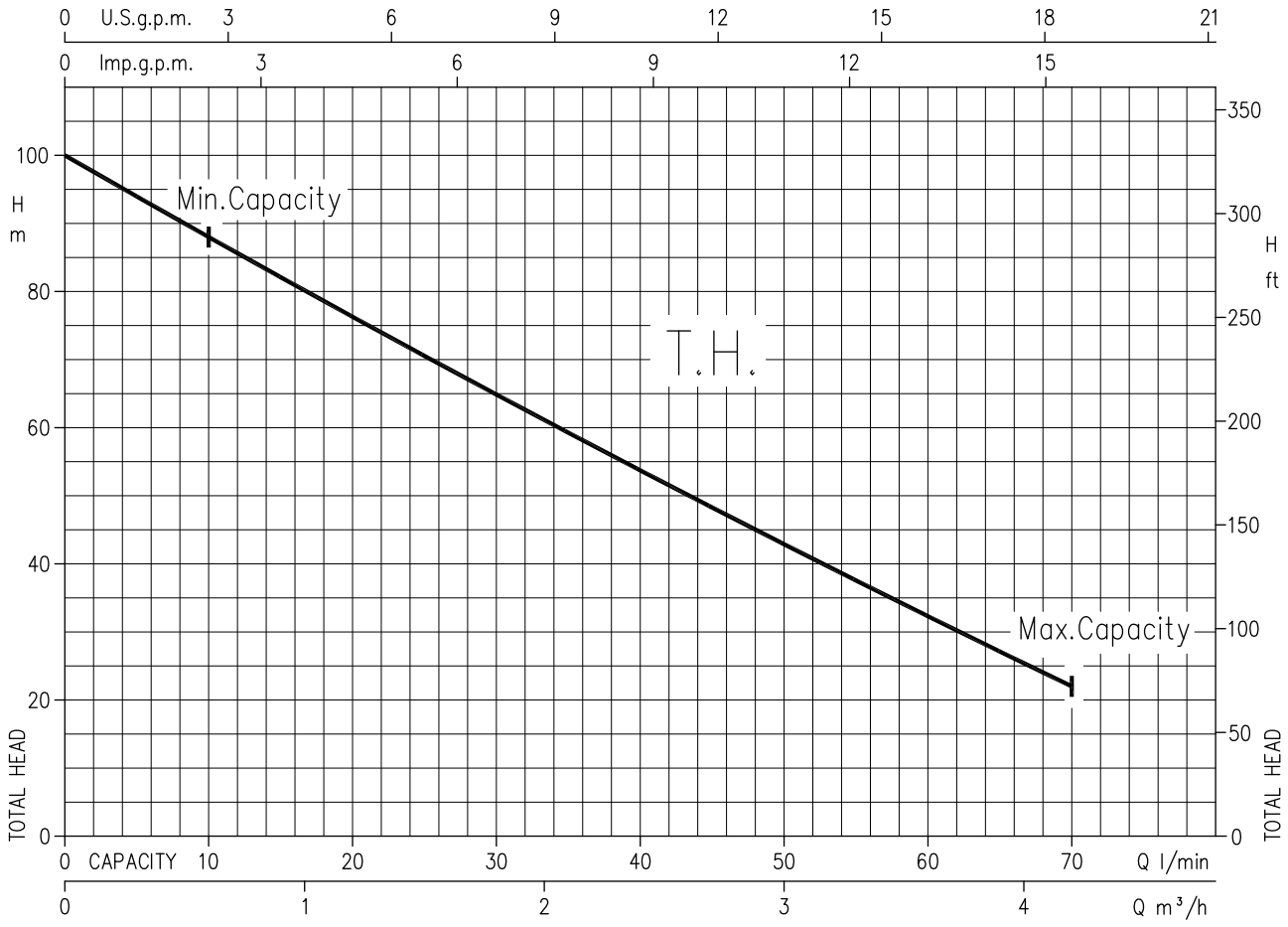

Rotation speed ≈ 2850 min^{-1}
Test standard: ISO 9906 – Annex A

CONSTRUCTION

50Hz

Rev. G

SECTIONAL VIEW

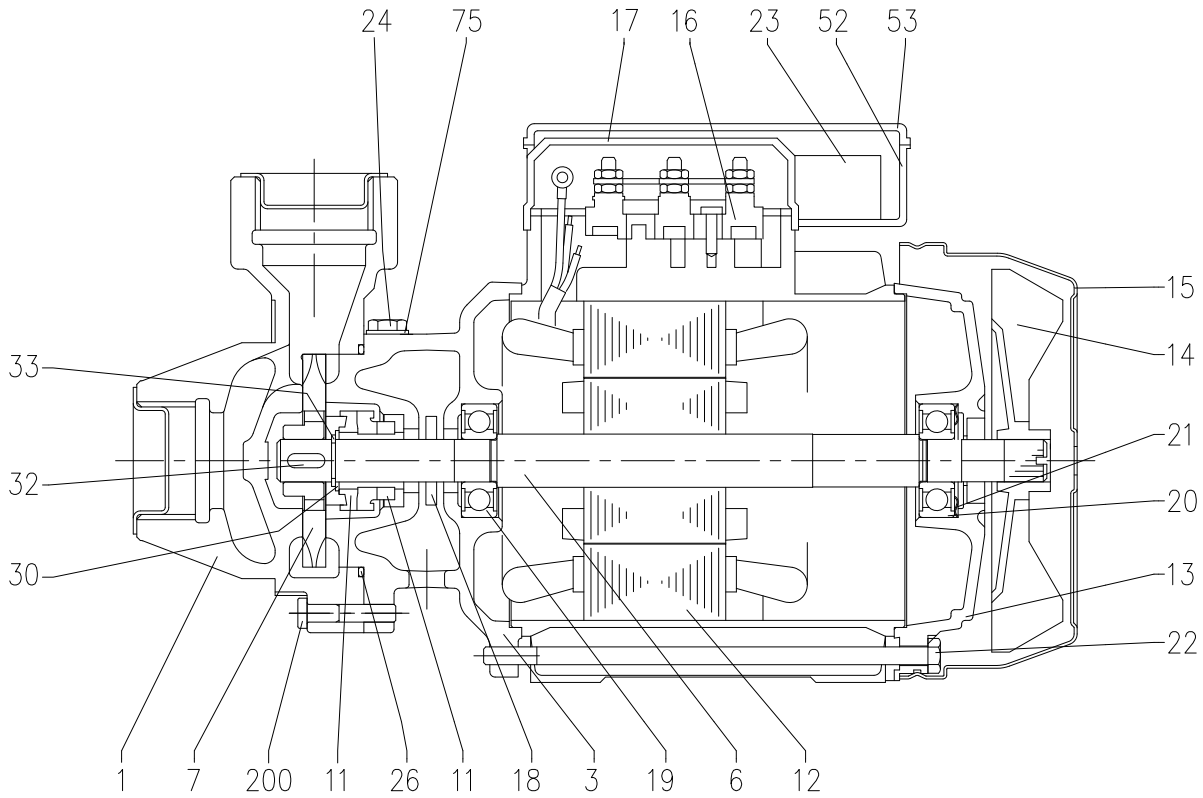

N°	PART NAME	MATERIAL	NO.FOR 1 UNIT	N°	PART NAME	MATERIAL	NO.FOR 1 UNIT
1	Casing	Cast iron	1	20	Fan side ball bearing	-	1
3	Motor bracket	Cast iron	1	21	Adjusting ring	Steel C70	1
6	Shaft with rotor	[1]	1	22	Tie rod	Fe 42 Zincate	4
7	Impeller	Brass	1	23	Capacitor [4]	-	1
11	Mechanical seal [2]	Carbon/Ceramic/NBR	1	24	Priming plug	Brass	1
12	Motor frame with stator	-	1	26	O-Ring	NBR	1
13	Motor cover	Aluminium	1	30	Washer	AISI 304	1
14	Fan	PP	1	32	Key	AISI 316	1
15	Fan cover	Fe P04 Zincate	1	33	Seeger ring	AISI 304	1
16	Terminal box	-	1	52	Capacitor box [4]	ABS	1
17	Terminal box cover [3]	Aluminium	1	53	Capacitor box cover [4] [5]	ABS [5]	1
18	Splash ring	NBR	1	75	Washer	Aluminium	1
19	Pump side ball bearing	-	1	200	Screw	Zn Steel Cl. 8.8 ISO 898-1	3

[1] Material: AVZ for version PRA 0.50
AISI 303 (wet extension) for the other version
[2] See constructions mechanical seal page 301-302
[3] Only for three phase
[4] Only for single phase
[5] With gasket in NBR for version single phase PRA 0.50 - PRA 0.80 - PRA 1.00

MECHANICAL SEAL
(UP TO 0.75 kW)

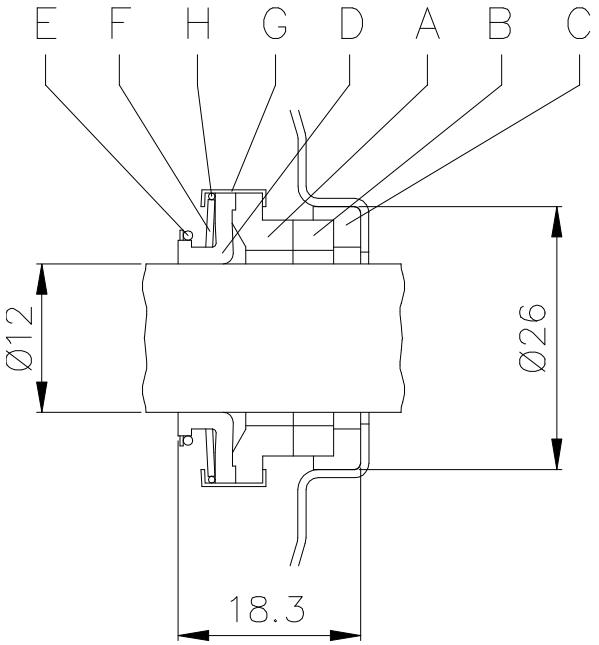

REF	PART NAME	MATERIAL product standard PRA
A	Rotary seal ring	carbon graphite
B	Stationary seal ring	ceramic
C	Gasket	NBR
D	Bellows	NBR
E	Ring	AISI 304
F	Self driving spring	AISI 304
G	Frame	AISI 304
H	Retainer ring	AISI 304

MECHANICAL SEAL
(1.1 kW AND ABOVE)

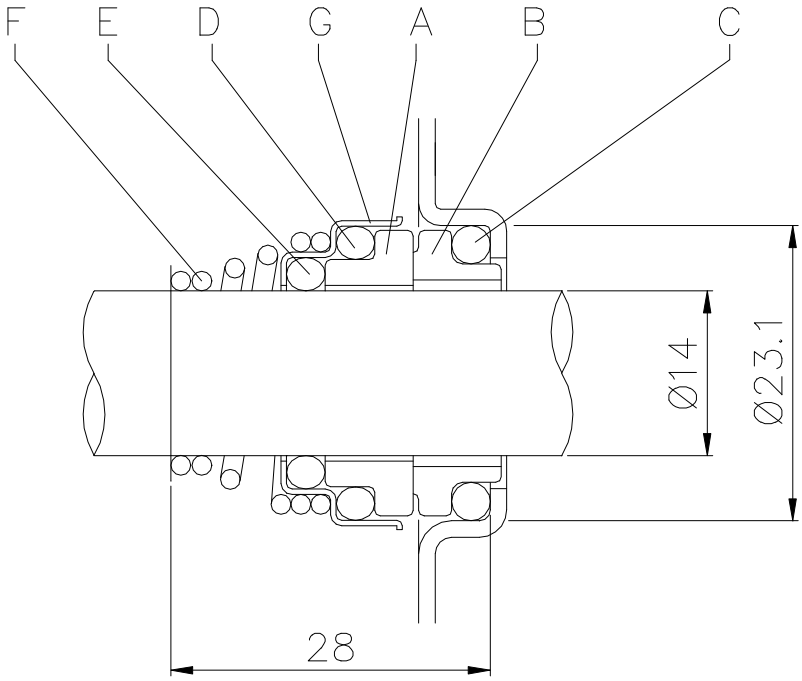

REF	PART NAME	MATERIAL product standard PRA
A	Rotary seal ring	ceramic
B	Stationary seal ring	carbon graphite
C	O Ring	NBR
D	O Ring	NBR
E	O Ring	NBR
F	Self driving spring	AISI 316
G	Frame	AISI 304

BEARINGS

Pump Type		Ball bearing	
Single phase	Three phase	Pump side	Fan side
PRA 0.50 M	PRA 0.50	6201 2RSH	6201 2RSH
PRA 0.80 M	PRA 0.80	6202 2RSH	6202 2RSH
PRA 1.00 M	PRA 1.00	6202 2RSH	6202 2RSH
PRA 1.50 M	PRA 1.50	6204 2RSH	6203 2RSH
PRA 2.00 M	PRA 2.00	6204 2RSH	6203 2RSH

DIMENSIONS AND WEIGHT

50Hz

Rev. G

PUMP

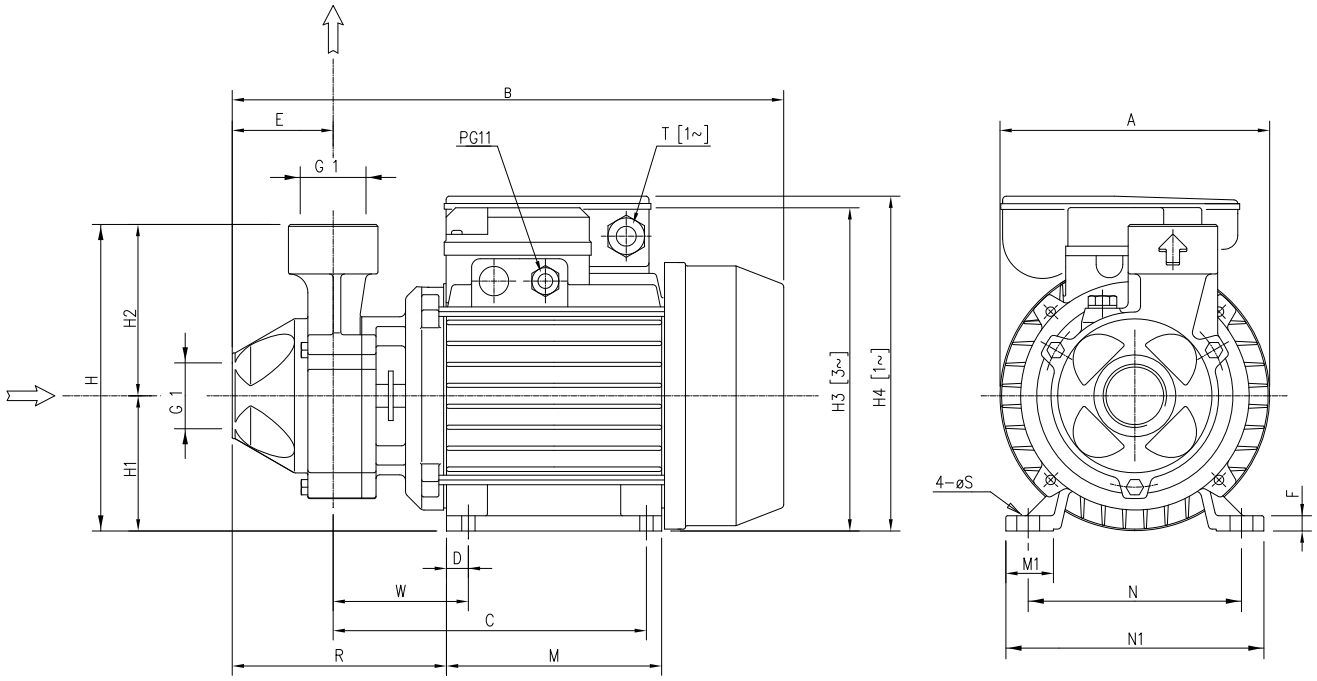

Pump Type	Dimensions mm																			Weight
	A	B	C	D	E	F	H	H1	H2	H3	H4	M	M1	N	N1	R	T	W	S	[kgf]
PRA 0.50M	130	263,5	148,5	10	50	7	143	63	80	-	160	100	23	100	120	118,5	PG11	68,5	7	5,6
PRA 0.50T	130	263,5	148,5	10	50	7	143	63	80	149,5	-	100	23	100	120	118,5	-	68,5	7	5,6
PRA 0.80M	130	290,5	159,3	11	53,8	9	161	71	90	-	178	112	25	112	135	122	PG11	69,3	7	9,2
PRA 0.80T	150	290,5	159,3	11	53,8	9	161	71	90	167,5	-	112	25	112	135	122	-	69,3	7	9,2
PRA 1.00M	150	290,5	159,3	11	53,8	9	161	71	90	-	178	112	25	112	135	122	PG11	69,3	7	9,7
PRA 1.00T	150	290,5	159,3	11	53,8	9	161	71	90	167,5	-	112	25	112	135	122	-	69,3	7	10,5
PRA 1.50M	162	330,5	188	12	57	12	175	80	95	-	212	124	28	125	152	144	PG13.5	88	9	14,5
PRA 1.50T	162	330,5	188	12	57	12	175	80	95	186,5	-	124	28	125	152	144	-	88	9	15,5
PRA 2.00M	162	330,5	188	12	57	12	175	80	95	-	212	124	28	125	152	144	PG13.5	88	9	15,8
PRA 2.00T	162	344	188	12	57	12	175	80	95	186,5	-	124	28	125	152	144	-	88	9	17,7

[1~] Single Phase
[3~] Three Phase

PACKING

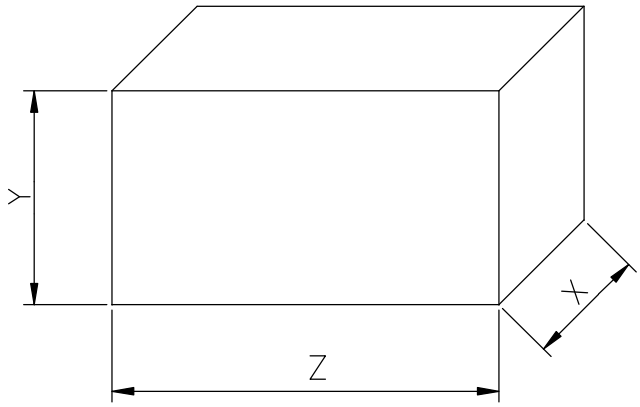

Pump Type		Packing [mm]			Weight [kgf]	
[1~]	[3~]	X	Y	Z	[1~]	[3~]
PRA 0.50 M	PRA 0.50	155	195	285	6,1	6,1
PRA 0.80 M	PRA 0.80	180	200	305	9,4	9,4
PRA 1.00 M	PRA 1.00	180	200	305	10,5	9,9
PRA 1.50 M	PRA 1.50	160	205	355	15,4	13,7
PRA 2.00 M	PRA 2.00	195	230	372	16,5	15,4

[1~] Single Phase
[3~] Three Phase

TECHNICAL DATA

50Hz

Rev. G

MOTOR DATA

Pump type		Power		Efficiency		Capacitor		Efficiency (% load) Three phase η %			Input [kW]		Full load current [A]			Locked rotor current [A]		
Single Phase	Three Phase	[kW]	[HP]	Single Phase	Three Phase	Single Phase [μF]	[V]	50%	75%	100%	Single Phase	Three Phase	Single Phase 230 V	Three Phase 230 V	Three Phase 400 V	Single Phase 230 V	Three Phase 230 V	Three Phase 400 V
PRA 0.50 M	PRA 0.50	0.37	0.5	-	-	10	450	-	-	-	0.57	0.55	2.6	1.7	1.0	6.9	7.0	3.8
PRA 0.80 M	PRA 0.80	0.6	0.8	-	-	16	450	-	-	-	1.10	1.10	4.9	3.6	2.1	16.5	17.0	10
PRA 1.00 M	PRA 1.00	0.75	1	-	IE2	20	450	77.2	80.9	81.3	1.25	0.92	5.6	2.9	1.7	19	22.0	12.9
PRA 1.50 M	PRA 1.50	1.1	1.5	-	IE2	35	450	79.7	82.5	83.0	2.27	1.80	10.0	5.5	3.2	39	45.0	25.7
PRA 2.00 M	PRA 2.00	1.5	2	-	IE2	40	450	78.6	83.0	84.2	2.45	1.78	10.9	6.3	3.7	43	34.3	20.0

NOISE DATA

Pump type		Power		L_{pA} - dB(A) *
Single Phase	Three Phase	[kW]	[HP]	
PRA 0.50 M	PRA 0.50	0.37	0.5	<70
PRA 0.80 M	PRA 0.80	0.6	0.8	
PRA 1.00 M	PRA 1.00	0.75	1	
PRA 1.50 M	PRA 1.50	1.1	1.5	73
PRA 2.00 M	PRA 2.00	1.5	2	

* Mean value of several measures at 1m distance around the pump.
Tollerance ± 2.5 dB.